Description

The PJ54B Series is a high input voltage,low quiescent current,low-dropout linear regulator able to provide 300mA load current.

The LDO features very fast response against line voltage transient and load current transient, and ensures no overshoot voltage during the LDO start up and short circuit recovery.

The device features integrated short-circuit and thermal shutdown protection.

Features

- Low Quiescent Current：2.1uA
- High Input Voltage Rating：Up to 55V
- Maximum Output Current: 350mA
- Low Dropout : 350mV @ 100mA
- High PSRR：85dB at 1KHz
- Fixed Output Voltages：1.8V,3V,3.3V,5V
- Fast Transient Response
- Current Limiting Protection
- Thermal Shutdown Protection
- Available Packages：SOT-23-5

Applications

- Battery-Powered Equipment
- Smoke Detector and Sensor
- Micro Controller Applications

Typical Application Circuit

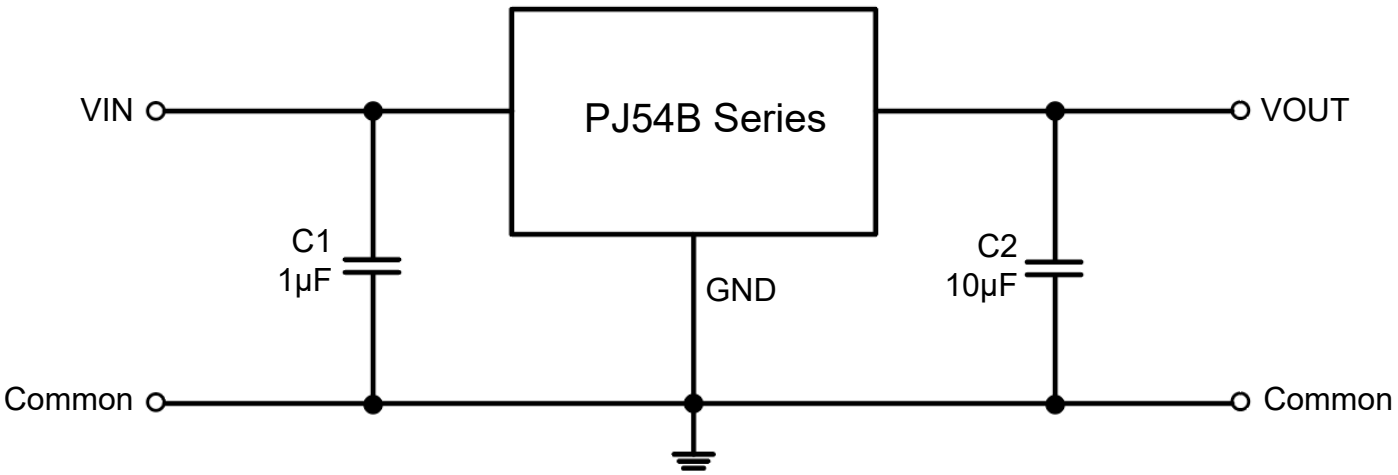

Pin Distribution

SOT-23-5

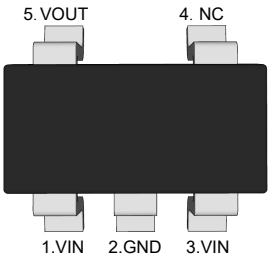

(Top View)

Functional Pin Description

Pin Name	Pin Function
EN	Chip Enable (Active High). Note that this pin is high impedance
NC	NO Connected
GND	Ground
VOUT	Output Voltage
VIN	Power Input Voltage

Ordering Information

PJ54B □□□□

- Package Type
  SE:SOT-23-5
- Output Voltage
  18 : 1.8V 30 : 3.0V 33 : 3.3V
  50 : 5.0V
- Output current tap
  M : 350mA
- Pin arrangement version number

Orderable Device	Package	Reel (inch)	Package Qty (PCS)	Eco Plan Note	MSL Level	Marking Code
PJ54BM18SE	SOT-23-5	7	3000	RoHS & Green	MSL3	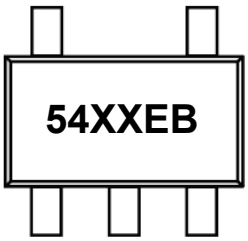 XX:Output Voltage e.g. 30:3.0V
PJ54BM30SE						
PJ54BM33SE						
PJ54BM50SE						

Note:
RoHS: PJ defines "RoHS" to mean semiconductor products that are compliant with the current EU RoHS requirements for all 10 RoHS substances, including the requirement that RoHS substance do not exceed 0.1% by weight in homogeneous materials.
Green: PJ defines "Green" to mean Halogen-Free and Antimony-Free.

Function Block Diagram

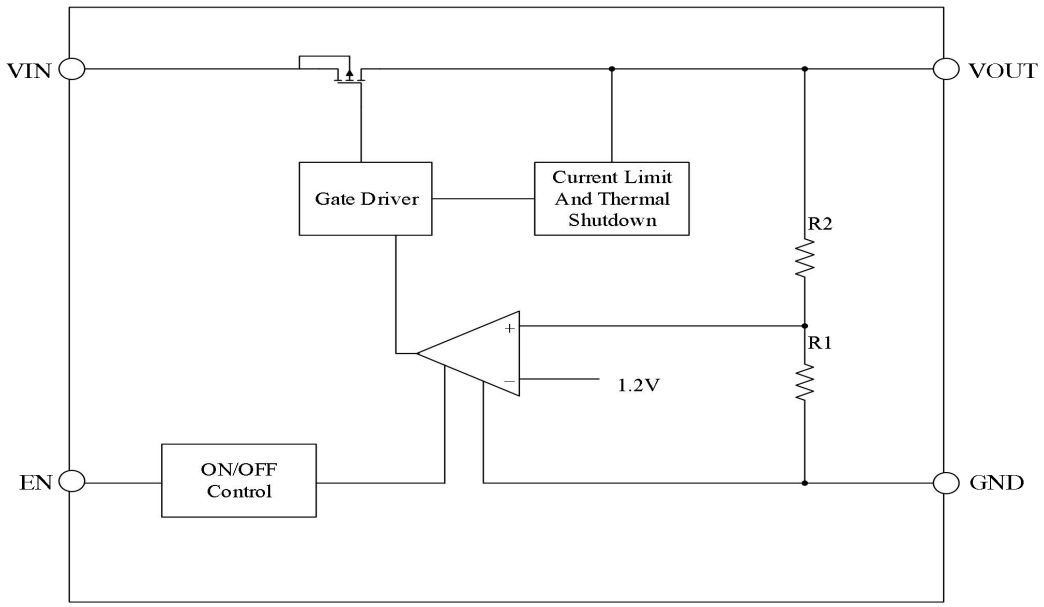

Absolute Maximum Ratings

Ratings at 25℃ ambient temperature unless otherwise specified.

Parameter	Value	Unit
VIN to GND Voltage	-0.3 ~ +55	V
VOUT to GND Voltage	-0.3 ~ +6	V
VOUT to VIN Voltage	-55 ~ +0.3	V
EN to GND Voltage	-0.3 ~ +55	V
Output Current	Internally limited	--
Power Dissipation	400	mW
Thermal Resistance,Junction-to-Ambient	300	°C/W
Operating Ambient Temperature	-40 ~ +85	°C
Junction temperature	150	°C
Storage temperature range	-40 ~ +150	°C
ESD(HBM)	4	KV

Electrical Characteristics

(V_{IN}=V_{OUT}+1, C_{IN}=1μF, C_{OUT}=10μF, T_A=25°C , unless otherwise noted.)

Parameter	Symbol	Test Conditions	Min.	Typ.	Max.	Unit
Input Voltage	V_{IN}		3	--	45	V
Output Voltage Accuracy	ΔV_{OUT}	V_{IN}=12V, I_{OUT}=10mA	-2	--	+2	%
Quiescent Current	I_Q	V_{IN}=12V, I_{OUT}=0mA	--	2.1	--	μA
Maximum Output Current	I_{OUT_Max}		300	350	--	mA
Dropout Voltage	V_{DROP}	V_{IN}=V_{OUTNOM}-0.1V, I_{OUT}=10mA	--	35	--	mV
		V_{IN}=V_{OUTNOM}-0.1V, I_{OUT}=100mA	--	350	--	
Line Regulation	ΔV_{LINE}	V_{OUTNOM}+0.5V≤V_{IN}≤40V I_{OUT}=1mA	--	0.01	--	%/V
Load Regulation	ΔV_{LOAD}	V_{IN}=12V, 1mA<I_{OUT}<100mA	--	0.02	--	%/mA
Current Limit	I_{LIM}		--	500	--	mA
Current Limit	V_{IH}		1	--	--	V
Power Supply Rejection Ratio	PSRR	V_{IN}=12V,I_{OUT}=10mA f=1KHz,V_{OUT}=3.3V	--	85	--	dB
Thermal Shutdown Temperature	T_{SHDN}	Shutdown, Temp increasing	--	150	--	°C
Thermal Reset Temperature	T_{SHDN}	Reset, Temp increasing	--	140	--	°C

Typical Characteristic Curves

Test Condition: T_A=25°C,Iout=1mA, C_{OUT}=10uF, unless otherwise noted

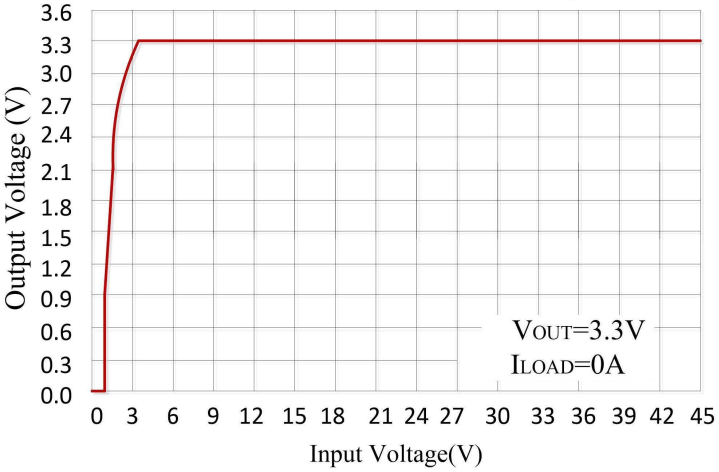

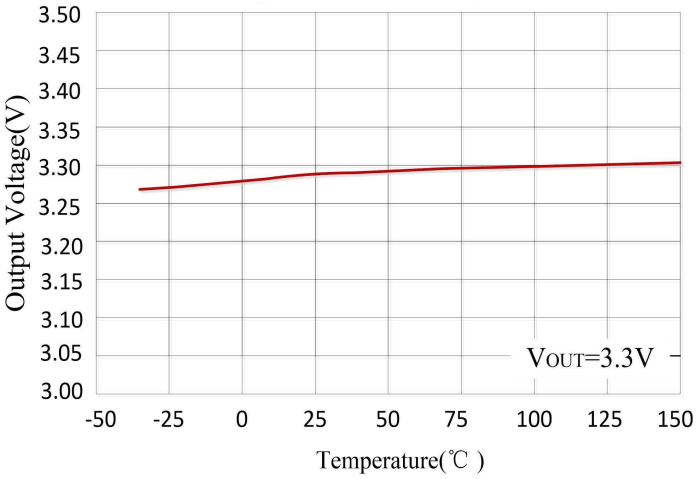

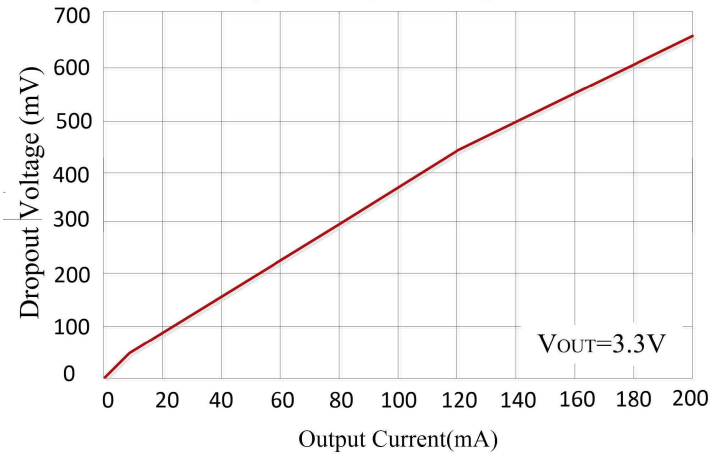

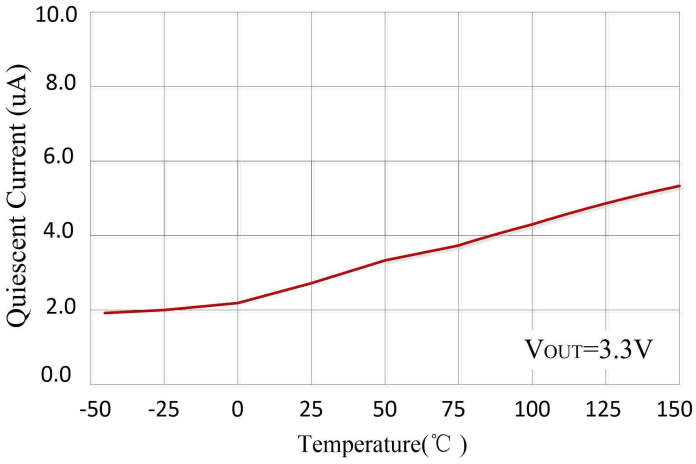

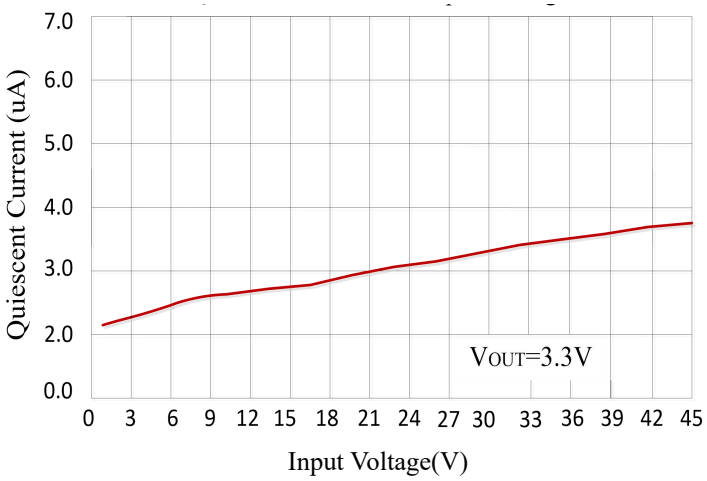

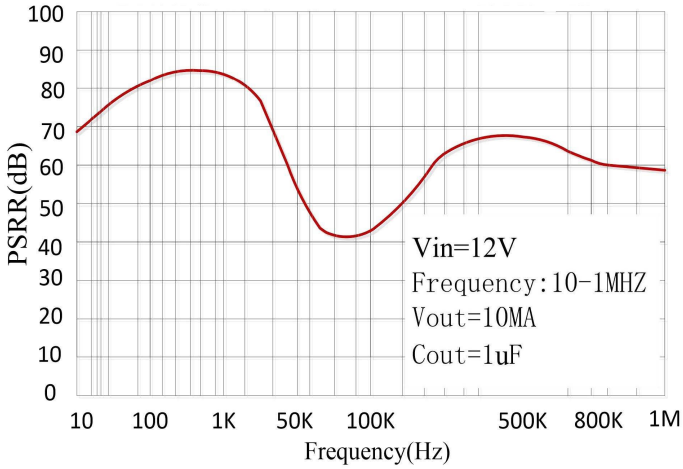

Line transient

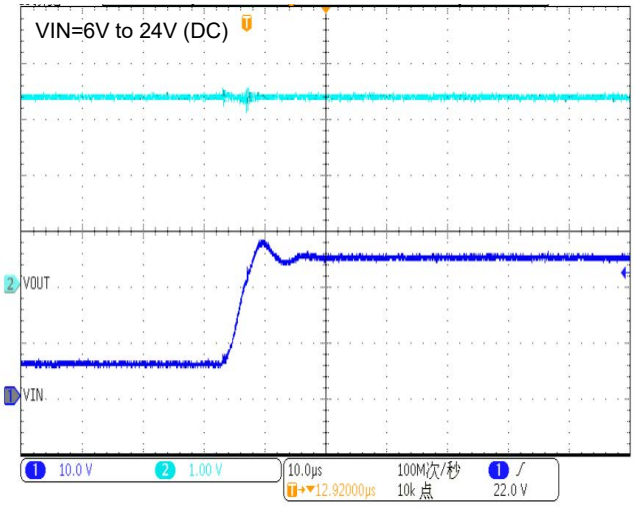

Load transient

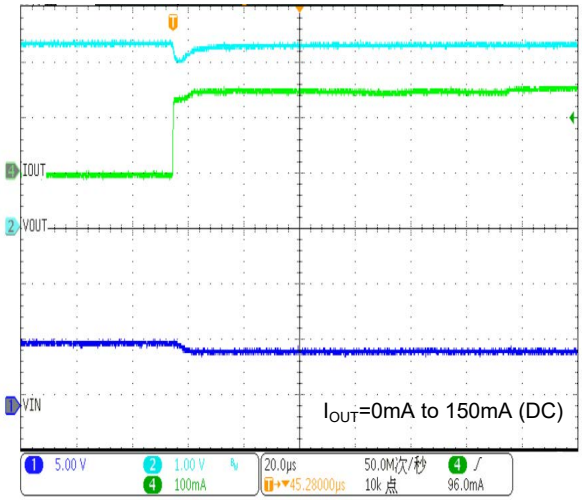

No-load start

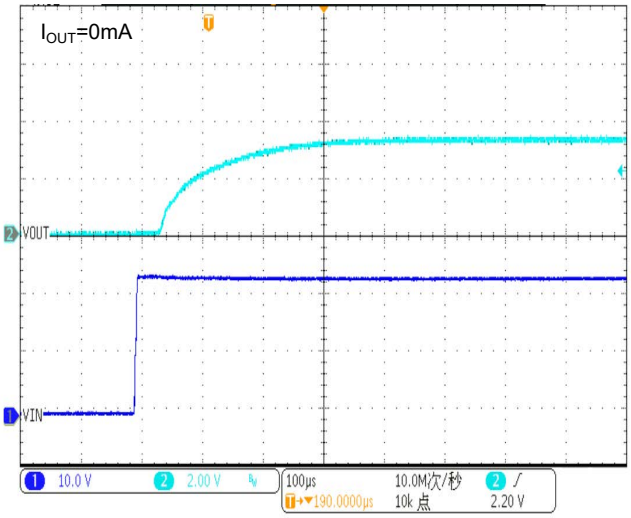

Start with load

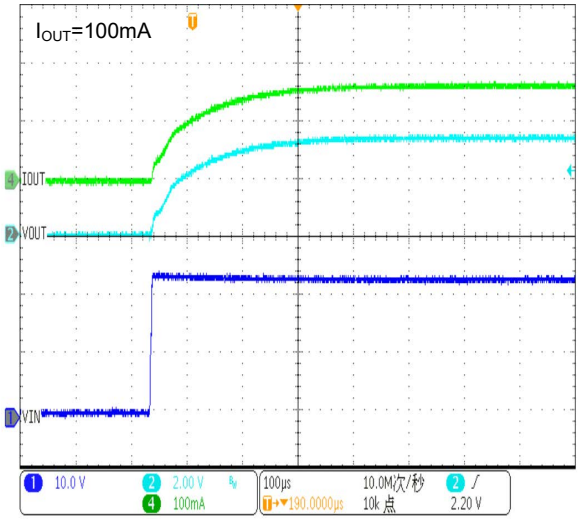

Short-circuit Power-on

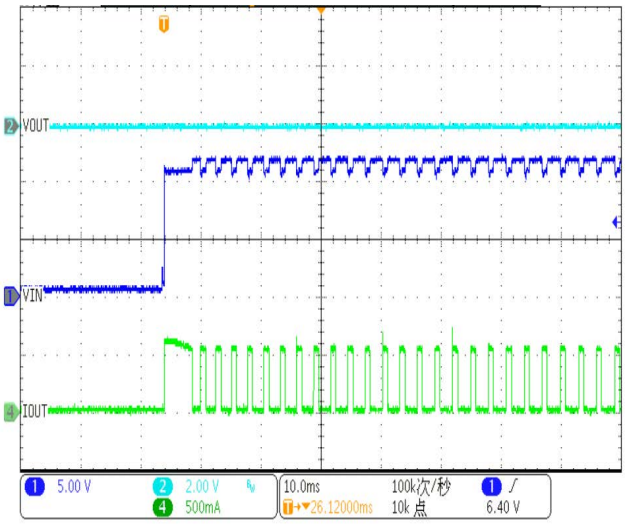

Power-on short

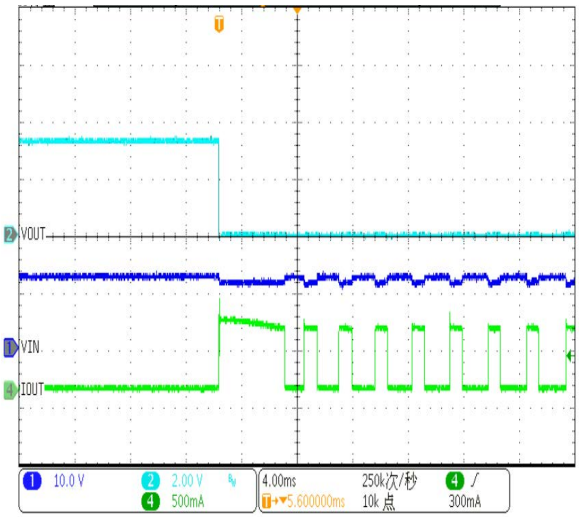

Functional Description

Input Capacitor

A 1μF ceramic capacitor is recommended to connect between VIN and GND pins to decouple input power supply glitch and noise. The amount of the capacitance may be increased without limit. This input capacitor must be located as close as possible to the device to assure input stability and less noise. For PCB layout, a wide copper trace is required for both VIN and GND.

Output Capacitor

An output capacitor is required for the stability of the LDO. The recommended minimum output capacitance is 10μF, ceramic capacitor is recommended, and temperature characteristics are X7R or X5R. Higher capacitance values help to improve load/line transient response. The output capacitance may be increased to keep low undershoot/overshoot. Place output capacitor as close as possible to VOUT and GND pins.

Current Limit and Short Circuit Protection

When output current at VOUT pin is higher than current limit threshold or the VOUT pin is direct short to GND, the current limit protection will be triggered and clamp the output current at a pre-designed level to prevent over-current and thermal damage.

Thermal Protection

The PJ54B Series has internal thermal sense and protection circuits. When excessive power dissipation happens on the device, such as short circuit at the output pin or very heavy load current with a large voltage drop across the device, the internal thermal protection circuit will be triggered, and it will shut down the power MOSFET to prevent the LDO from damage. As soon as excessive thermal condition is removed and the temperature of the device drops down, the thermal protection circuit will lease the control of the power MOSFET, and the LDO device goes to normal operation.

Package Outline
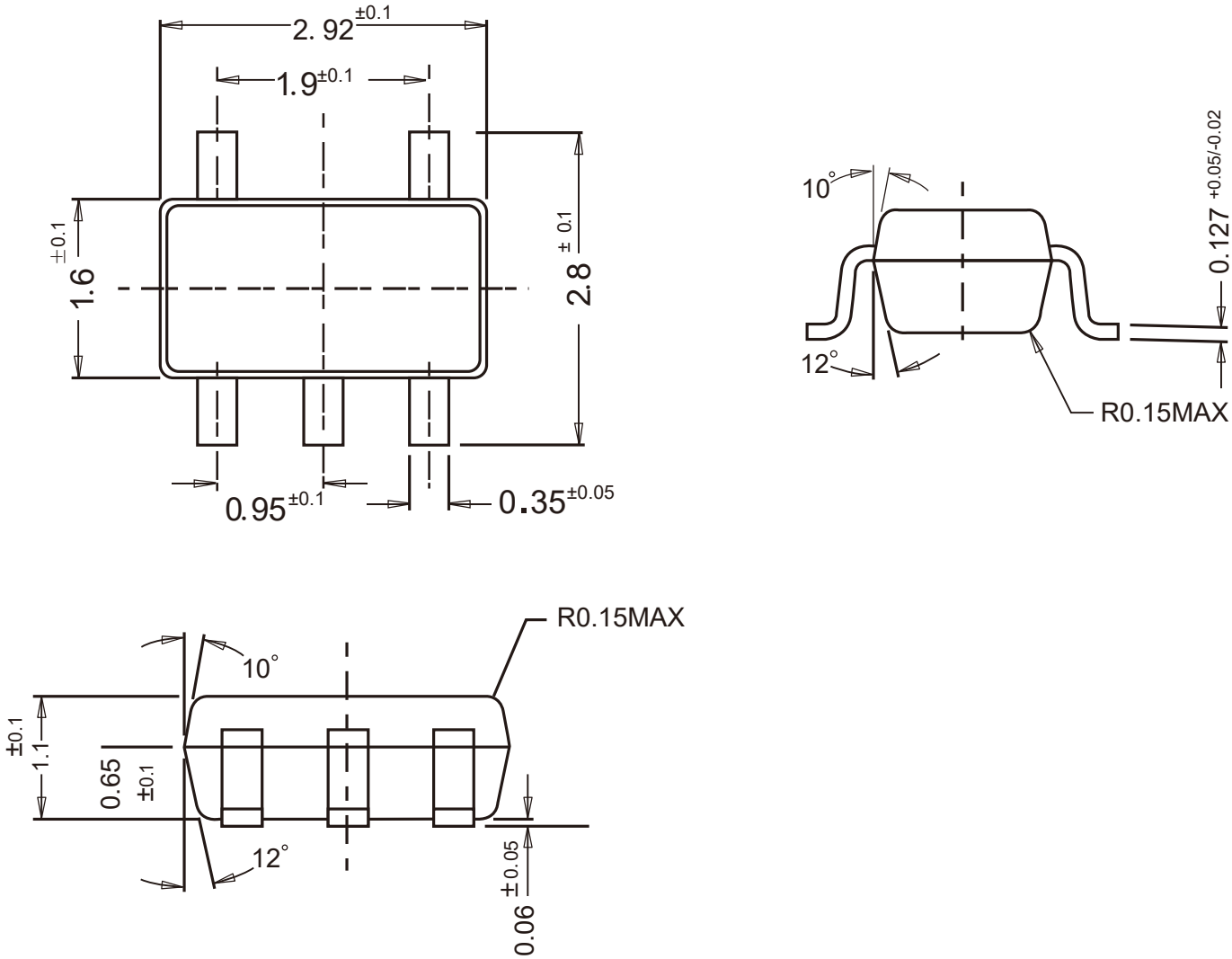
SOT-23-5
Dimensions in mm